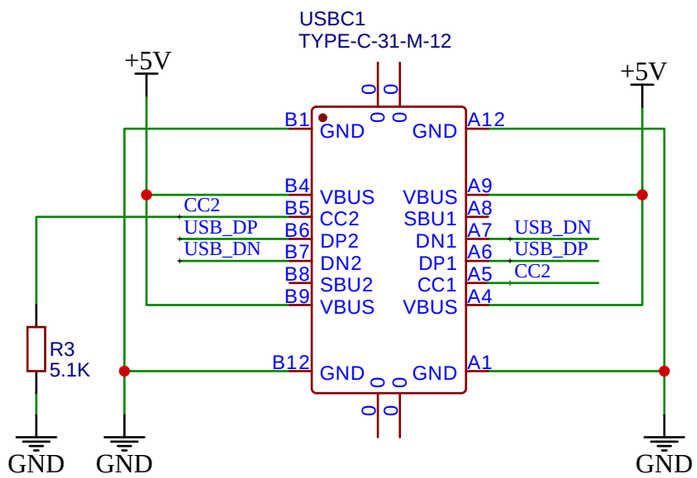

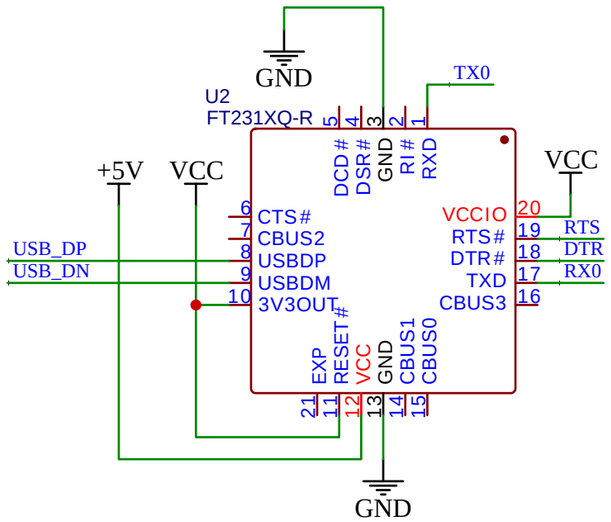

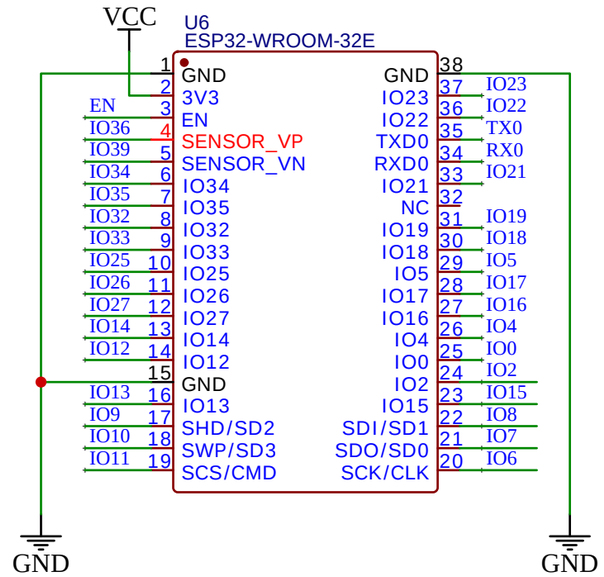

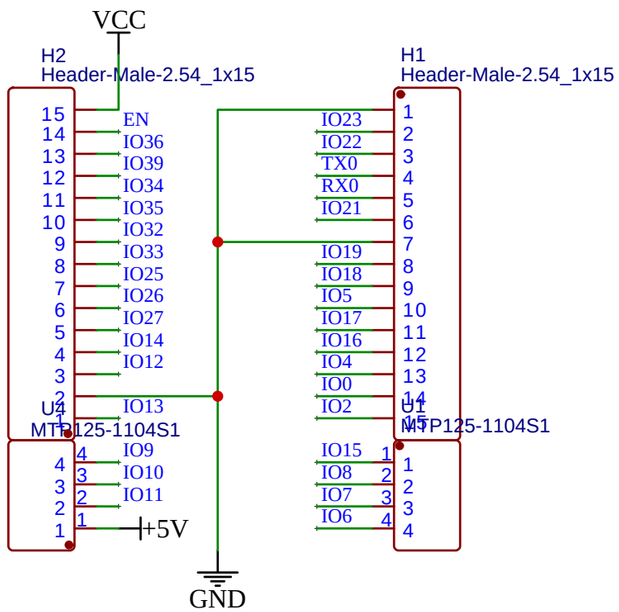

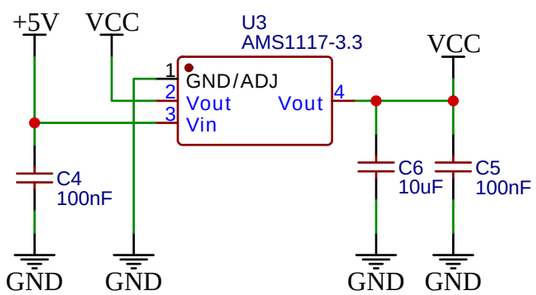

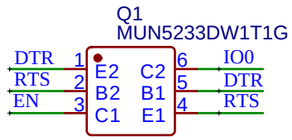

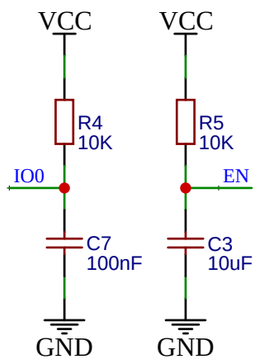

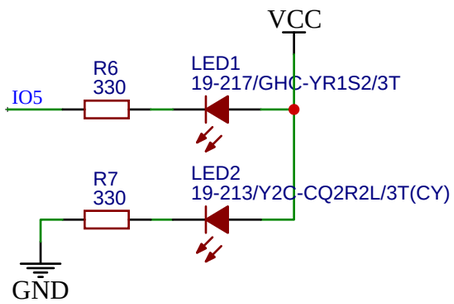

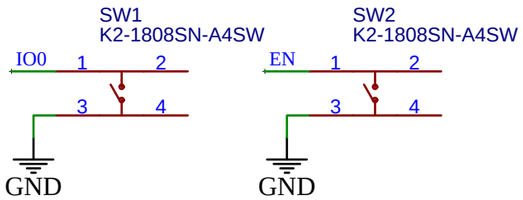

TITLE: IOXESP32+		REV: 1.0
ARTRONSHOP www.artronshop.co.th	Company: Artron Shop Co.,Ltd.	Sheet: 1/1
	Date: 2020-03-21 Drawn By: Sonthaya Nongnuch	